CECPIL-1250IG-5T2.14

1250 Gallon Pill Style Trickle Tank

Product Specifications

CARLSON ENGINEEREED COMPOSITES

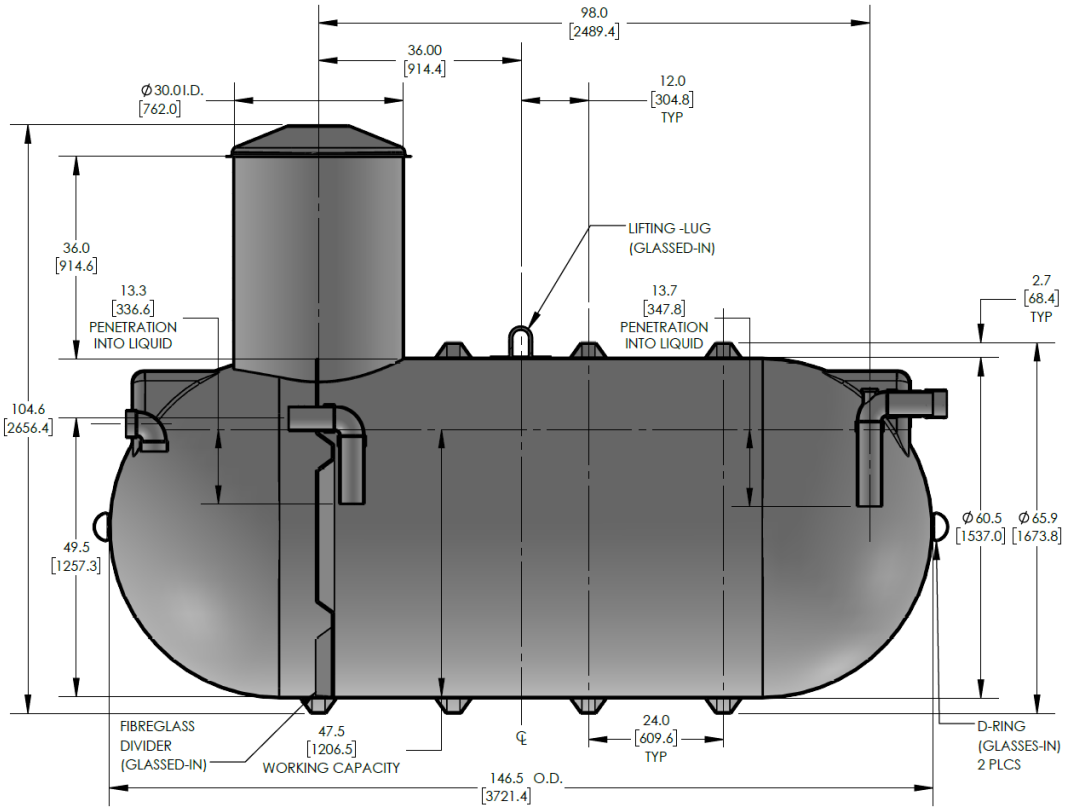

FEATURES AND BENEFITS

- CSA certified design and construction
- Corrosion resistant
- 100% neat resin construction
- Virtually maintenance-free
- External gelcoat for increased protection
- 30" wide easy-access manway
- Includes 4" standard ABS inlet
- Standard 10-year limited warranty

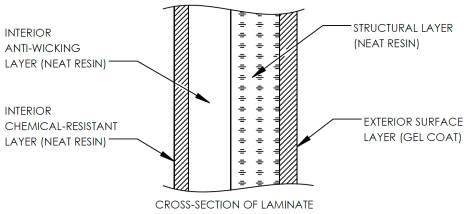

KEY SPECIFICATIONS

Nominal volume	1,250 imp. gallons	5,682 litres
Septic volume	864 imp. gallons	3,927 litres
Effluent volume	242 imp. gallons	1,100 litres
Overall length	146.4 in	3,718 mm
Approx. weight	587 lbs	266 kg

The CECPIL-1250IG-5T2.14 product is a CSA-approved 1250 imp. gallon fiberglass pill-style trickle tank designed for deep burial depths up to 2.14m (7ft). The light-weight fiberglass construction provides a durable, corrosion-resistant, and high-strength structure that requires virtually zero-maintenance.

AVAILABLE OPTIONS

- Additional fittings & connections
- Manway extensions
- Lockable manway cover
- Hinged manway cover
- Polylok effluent filter
- Double-walled construction
- Insulated or heat-traced
- NSF potable water lining
- Full customization & engineering

MARKETS & APPLICATIONS

RESIDENTIAL

COMMERCIAL

AGRICULTURAL

MINING

WWW.CARLSONCOMPOSITES.COM

PHONE: 1.204.233.0671 FAX: 1.204.233.6938 EMAIL: info@carlsoncomposites.com