CECPIL-7000IG-10H.6

7000 Gallon Pill Style Holding Tank

Product Specifications

CARLSON ENGINEEREED COMPOSITES

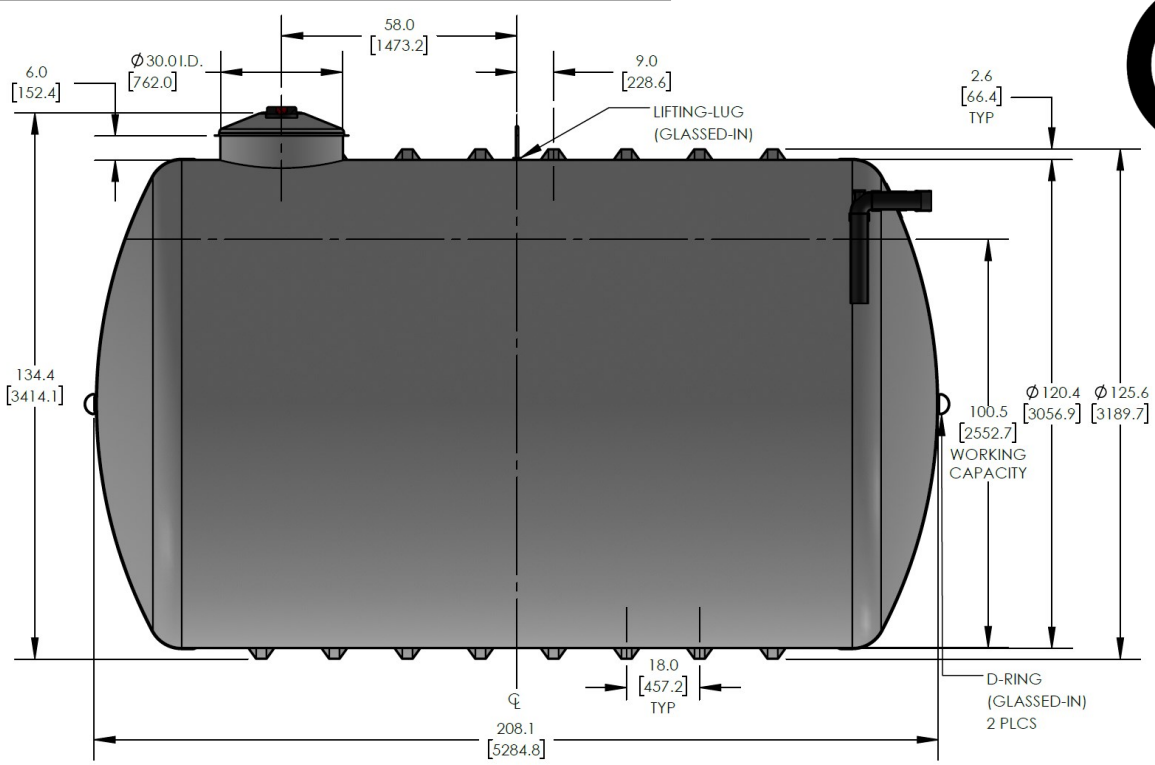

FEATURES AND BENEFITS

- CSA certified design and construction
- Corrosion resistant
- 100% neat resin construction
- Virtually maintenance-free
- External gelcoat for increased protection
- 30" wide easy-access manway
- Includes 4" standard ABS inlet
- Standard 10-year limited warranty

The CECPIL-7000IG-10H.6 product is an 10-ft diameter CSA-certified 7000 imp. gallon fiberglass pill-style holding tank designed for burial depths up to 0.6m (2ft). The lightweight filament wound fiberglass construction provides a durable, corrosion-resistant, and high-strength structure that requires virtually zero-maintenance.

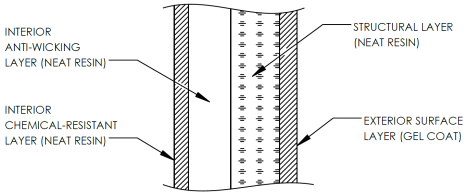

CROSS-SECTION OF LAMINATE

AVAILABLE OPTIONS

- Additional fittings & connections
- Manway extensions
- Lockable manway cover
- Hinged manway cover
- Polylok effluent filter
- Double-walled construction
- Insulated or heat-traced
- NSF potable water lining
- Full customization & engineering

KEY SPECIFICATIONS

Nominal volume	7,000 imp. gallons	31,823 litres
Septic volume	7,000 imp. gallons	31,823 litres
Effluent volume	-	-
Overall length	208.1 in	5,286 mm
Approx. weight	1,482 lbs	672 kg

MARKETS & APPLICATIONS

RESIDENTIAL

COMMERCIAL

AGRICULTURAL

MINING

WWW.CARLSONCOMPOSITES.COM

PHONE: 1.204.233.0671 FAX: 1.204.233.6938 EMAIL: info@carlsoncomposites.com